P-Channel NexFET™ Power MOSFET

Check for Samples: CSD25301W1015

FEATURES

- **Ultra Low Qg and Qgd**
- **Small Footprint**
- **Low Profile 0.62mm Height**
- **Pb Free**
- **RoHS Compliant**
- **Halogen Free**
- **CSP 1 × 1.5 mm Wafer Level Package**

APPLICATIONS

- **Battery Management**
- **Load Switch**
- **Battery Protection**

DESCRIPTION

The device has been designed to deliver the lowest on resistance and gate charge in the smallest outline possible with excellent thermal characteristics in an ultra low profile.

Top View

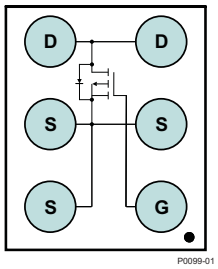

PRODUCT SUMMARY

V_{DS}	Drain to Source Voltage	–20		V
Q_g	Gate Charge Total (4.5V)	1.9		nC
Q_{gd}	Gate Charge Gate to Drain	0.4		nC
$R_{DS(on)}$	Drain to Source On Resistance	V_{GS} = –1.5V	175	mΩ
		V_{GS} = –2.5V	80	mΩ
		V_{GS} = –4.5V	62	mΩ
$V_{GS(th)}$	Voltage Threshold	–0.75		V

ORDERING INFORMATION

Device	Package	Media	Qty	Ship
CSD25301W1015	1 × 1.5 Wafer Level Package	7-inch reel	3000	Tape and Reel

ABSOLUTE MAXIMUM RATINGS

T_A = 25°C unless otherwise stated		VALUE	UNIT
V_{DS}	Drain to Source Voltage	–20	V
V_{GS}	Gate to Source Voltage	±8	V
I_D	Continuous Drain Current, T_C = 25°C(1)	–2.2	A
I_{DM}	Pulsed Drain Current, T_A = 25°C(2)	–8.8	A
P_D	Power Dissipation(1)	1.5	W
T_J, T_{STG}	Operating Junction and Storage Temperature Range	–55 to 150	°C

(1) $R_{\theta JA}$ = 85°C/W on 1in^2 Cu (2 oz.) on 0.060" thick FR4 PCB.

(2) Pulse width ≤300μs, duty cycle ≤2%

$R_{DS(ON)}$ vs V_{GS}

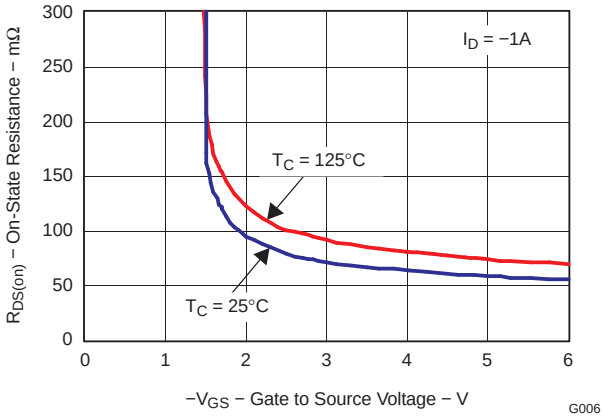

Gate Charge

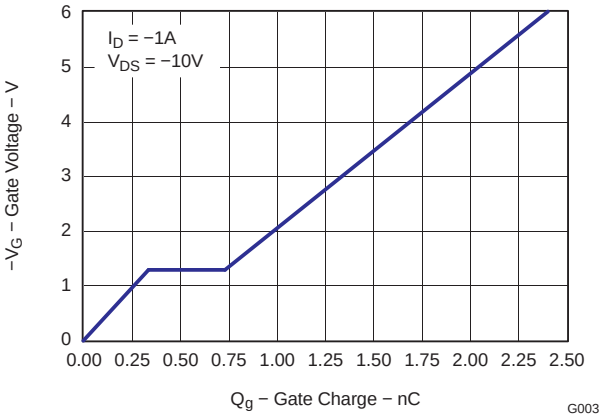

Please be aware that an important notice concerning availability, standard warranty, and use in critical applications of Texas Instruments semiconductor products and disclaimers thereto appears at the end of this data sheet.

PRODUCTION DATA information is current as of publication date. Products conform to specifications per the terms of the Texas Instruments standard warranty. Production processing does not necessarily include testing of all parameters.

Copyright © 2009–2010, Texas Instruments Incorporated

These devices have limited built-in ESD protection. The leads should be shorted together or the device placed in conductive foam during storage or handling to prevent electrostatic damage to the MOS gates.

ELECTRICAL CHARACTERISTICS

(T_A = 25°C unless otherwise stated)

PARAMETER		TEST CONDITIONS	MIN	TYP	MAX	UNIT
Static Characteristics						
BV_{DSS}	Drain to Source Voltage	V_{GS} = 0V, I_D = –250μA	–20			V
I_{DSS}	Drain to Source Leakage Current	V_{GS} = 0V, V_{DS} = –16V			–1	μA
I_{GSS}	Gate to Source Leakage Current	V_{DS} = 0V, V_{GS} = ±8V			–100	nA
$V_{GS(th)}$	Gate to Source Threshold Voltage	V_{DS} = V_{GS}, I_D = –250μA	–0.4	–0.75	–1	V
$R_{DS(on)}$	Drain to Source On Resistance	V_{GS} = –1.5V, I_D = –1A		175	220	mΩ
		V_{GS} = –2.5V, I_D = –1A		80	100	mΩ
		V_{GS} = –4.5V, I_D = –1A		62	75	mΩ
g_{fs}	Transconductance	V_{DS} = –10V, I_D = –1A		5.8		S
Dynamic Characteristics						
C_{ISS}	Input Capacitance	V_{GS} = 0V, V_{DS} = –10V, f = 1MHz		210	270	pF
C_{OSS}	Output Capacitance			90	120	pF
C_{RSS}	Reverse Transfer Capacitance			30	40	pF
Q_g	Gate Charge Total (–4.5V)	V_{DS} = –10V, I_D = –1A		1.9	2.5	nC
Q_{gd}	Gate Charge Gate to Drain			0.4		nC
Q_{gs}	Gate Charge Gate to Source			0.35		nC
Qg(th)	Gate Charge at Vth			0.17		nC
Q_{OSS}	Output Charge	V_{DS} = –9.8V, V_{GS} = 0V		1.7		nC
$t_{d(on)}$	Turn On Delay Time	V_{DS} = –10V, V_{GS} = –4.5V, I_D = –1A, R_G = 20Ω		4		ns
t_r	Rise Time			2		ns
$t_{d(off)}$	Turn Off Delay Time			29		ns
t_f	Fall Time			12		ns
Diode Characteristics						
V_{SD}	Diode Forward Voltage	I_S = –1A, V_{GS} = 0V		–0.75	–1	V
Q_{rr}	Reverse Recovery Charge	V_{dd}= –9.8V, I_F = –1A, di/dt = 200A/μs		0.9		nC
t_{rr}	Reverse Recovery Time	V_{dd}= –9.8V, I_F = –1A, di/dt = 200A/μs		8.2		ns

THERMAL CHARACTERISTICS

(T_A = 25°C unless otherwise stated)

PARAMETER		MIN	TYP	MAX	UNIT
$R_{\theta JA}$	Thermal Resistance Junction to Ambient (Minimum Cu area)			270	°C/W
	Thermal Resistance Junction to Ambient (1 in^2 Cu area)			105	°C/W

Copyright © 2009–2010, Texas Instruments Incorporated

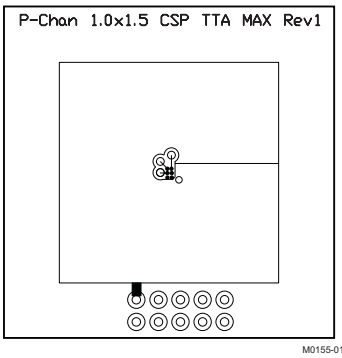

Max $R_{\theta JA}$ = 105°C/W when mounted on 1 inch^2 of 2 oz. Cu.

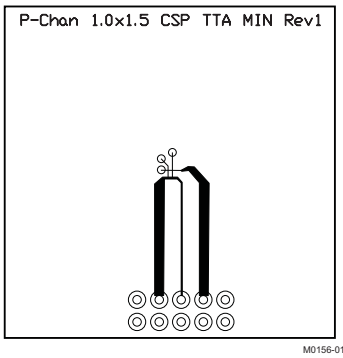

Max $R_{\theta JA}$ = 270°C/W when mounted on minimum pad area of 2 oz. Cu.

TYPICAL MOSFET CHARACTERISTICS

(T_A = 25°C unless otherwise stated)

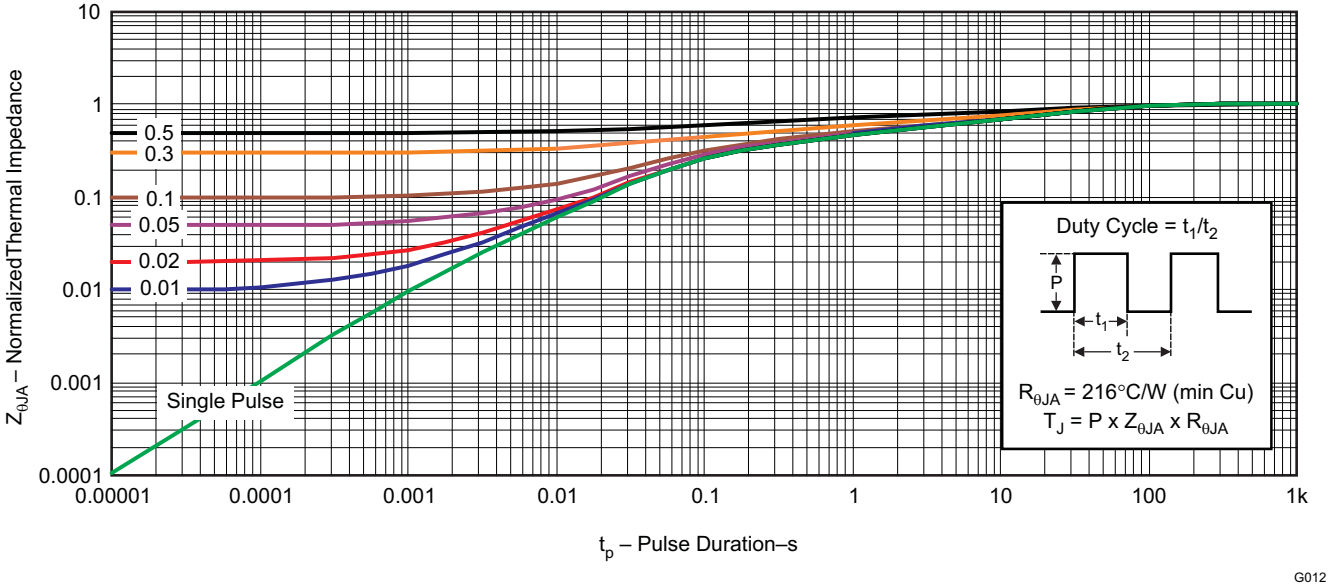

Figure 1. Transient Thermal Impedance

TYPICAL MOSFET CHARACTERISTICS (continued)

(T_A = 25°C unless otherwise stated)

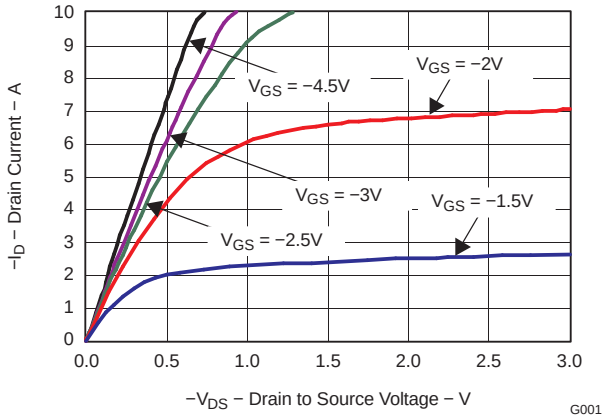

Figure 2. Saturation Characteristics

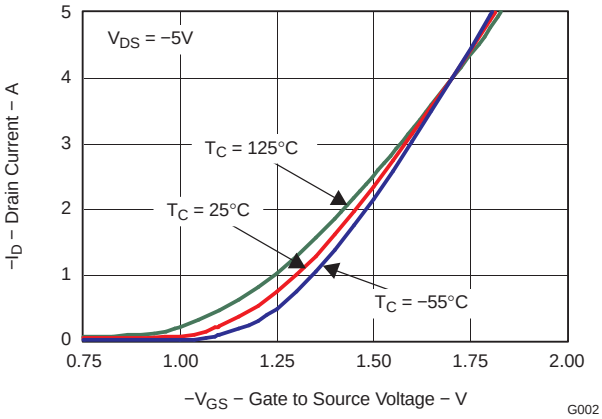

Figure 3. Transfer Characteristics

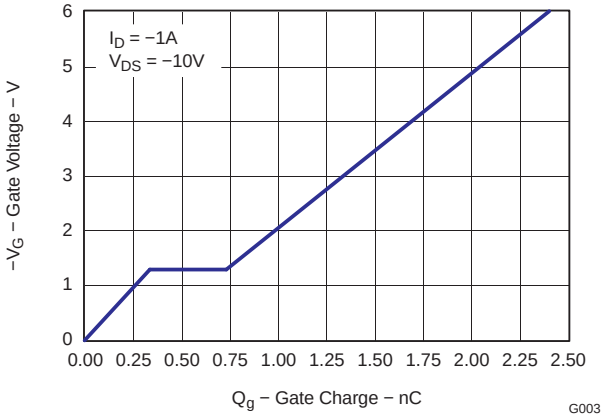

Figure 4. Gate Charge

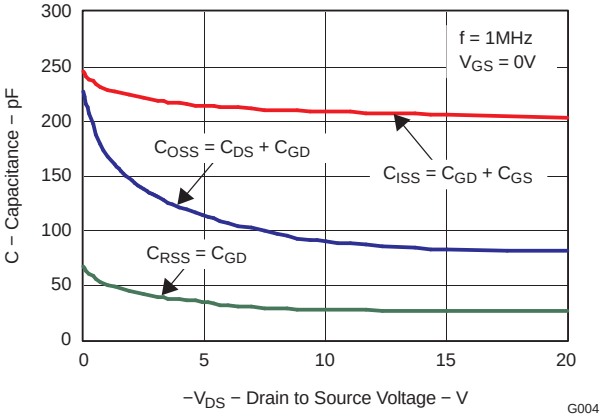

Figure 5. Capacitance

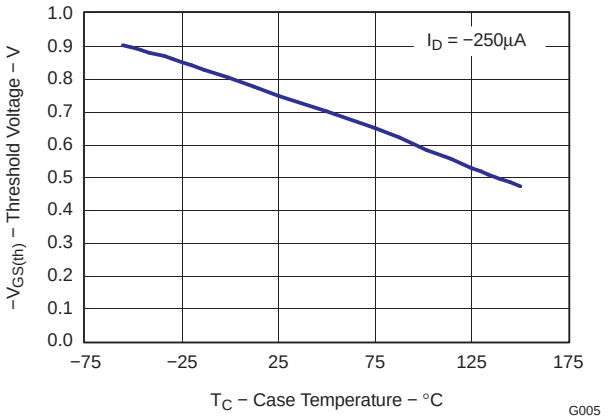

Figure 6. Threshold Voltage vs. Temperature

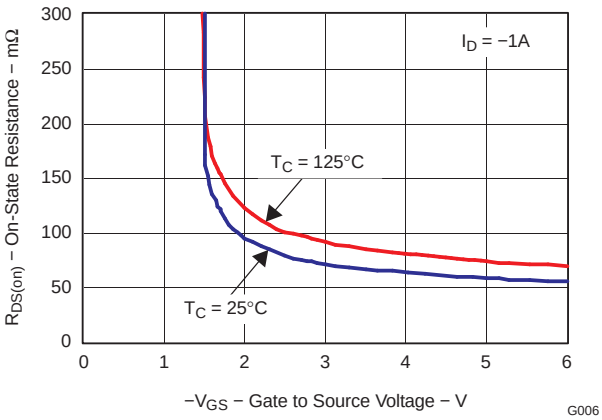

Figure 7. On Resistance vs. Gate Voltage

Copyright © 2009–2010, Texas Instruments Incorporated

TYPICAL MOSFET CHARACTERISTICS (continued)

(T_A = 25°C unless otherwise stated)

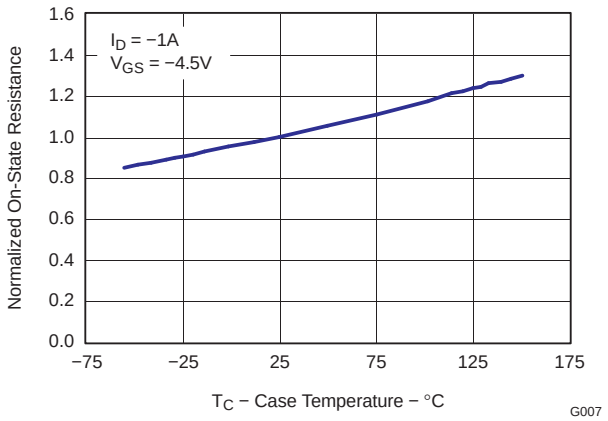

Figure 8. On Resistance vs. Temperature

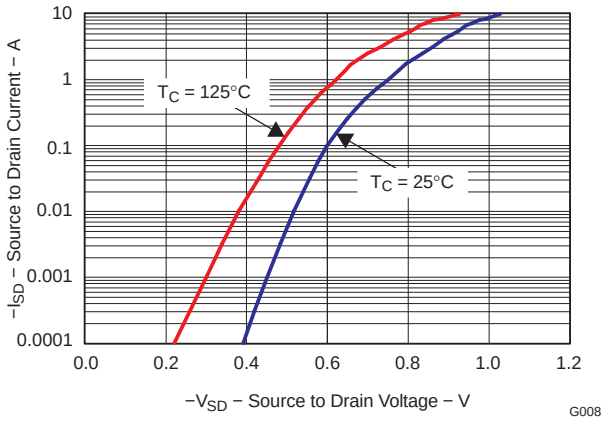

Figure 9. Typical Diode Forward Voltage

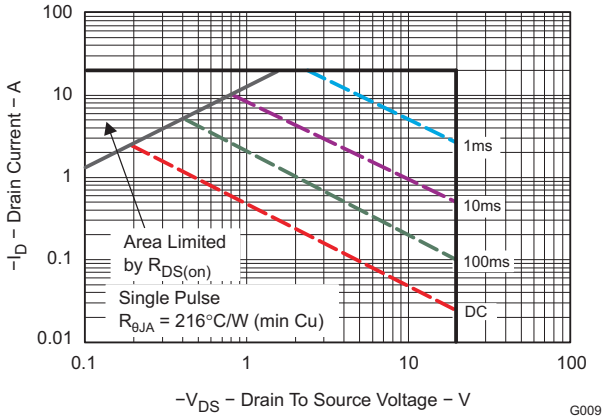

Figure 10. Maximum Safe Operating Area

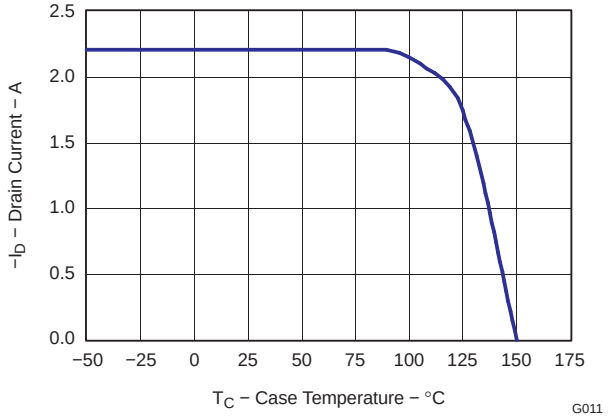

Figure 11. Maximum Drain Current vs. Temperature

MECHANICAL DATA

CSD25301W1015 Package Dimensions

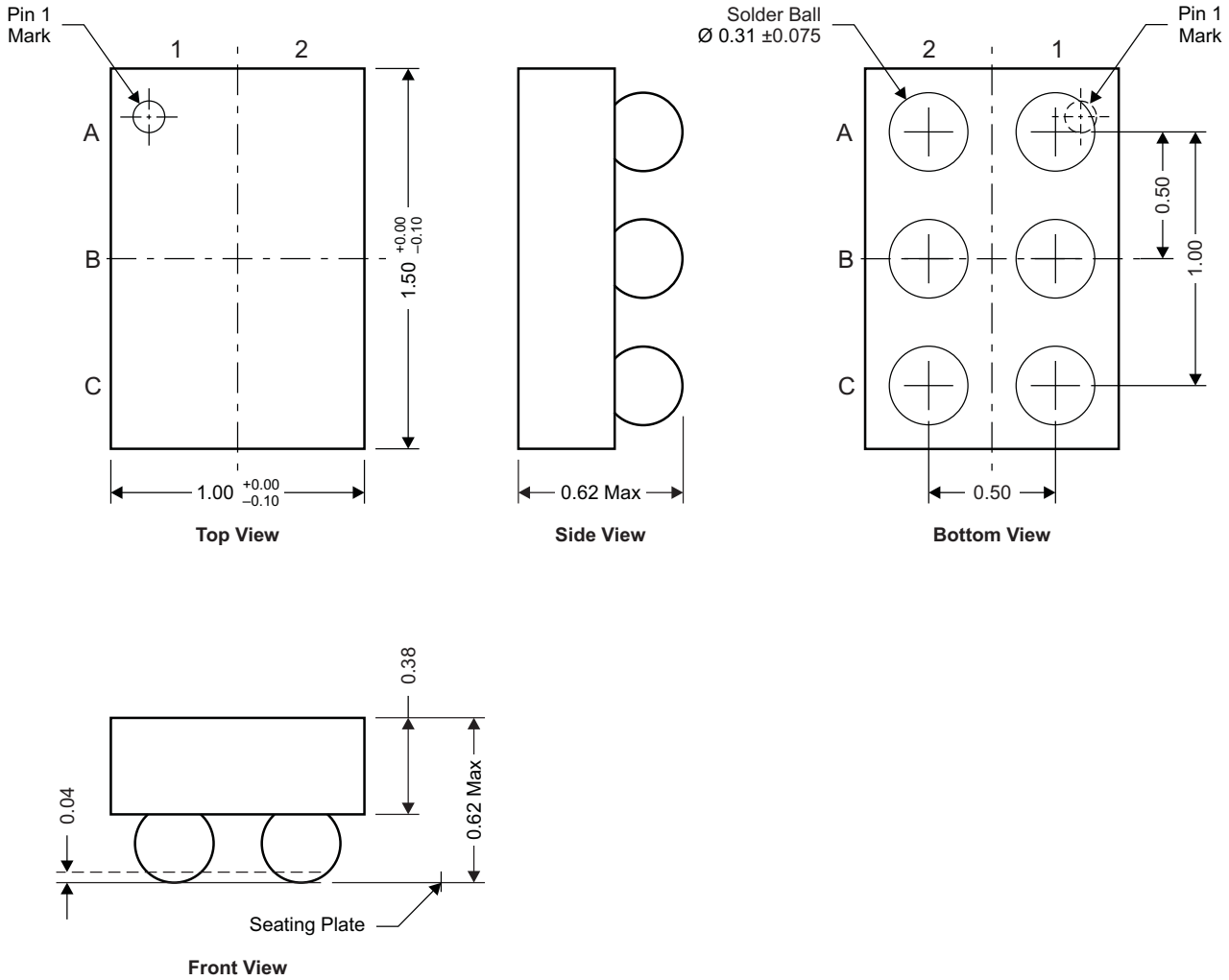

NOTE: All dimensions are in mm (unless otherwise specified)

Pinout

POSITION	DESIGNATION
C1, C2	Drain
A1	Gate
A2, B1, B2	Source

Copyright © 2009–2010, Texas Instruments Incorporated

Land Pattern Recommendation

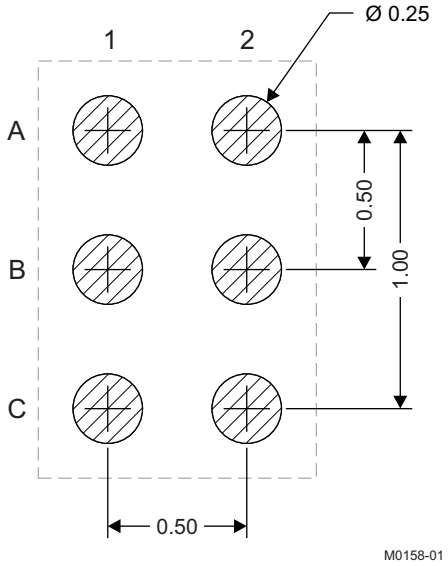

NOTE: All dimensions are in mm (unless otherwise specified)

Tape and Reel Information

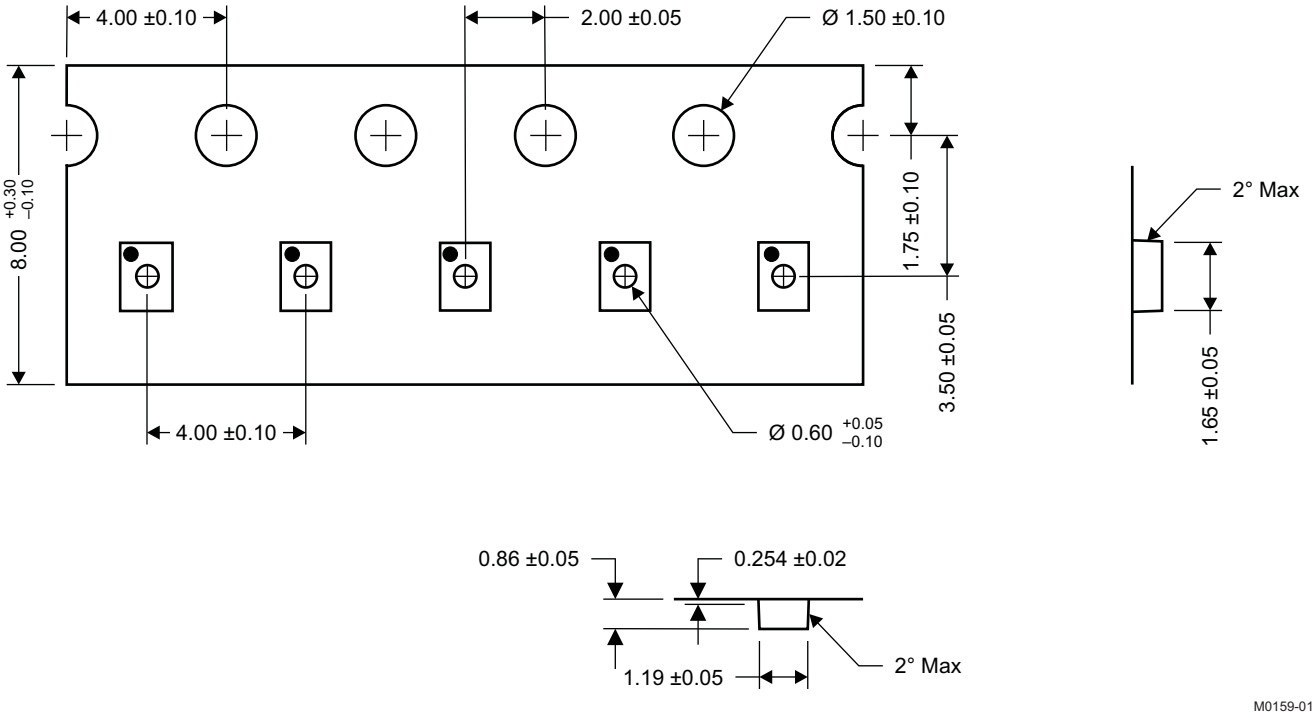

NOTE: All dimensions are in mm (unless otherwise specified)

REVISION HISTORY

Changes from Original (August 2009) to Revision A	Page
• Replaced incorrect label: $R_{\theta JC}$ with $R_{\theta JA}$ in the THERMAL CHARACTERISTICS table.	2

Changes from Revision A (August 2010) to Revision B	Page
• Deleted the Package Marking Information section	7

Copyright © 2009–2010, Texas Instruments Incorporated

TAPE AND REEL INFORMATION

REEL DIMENSIONS

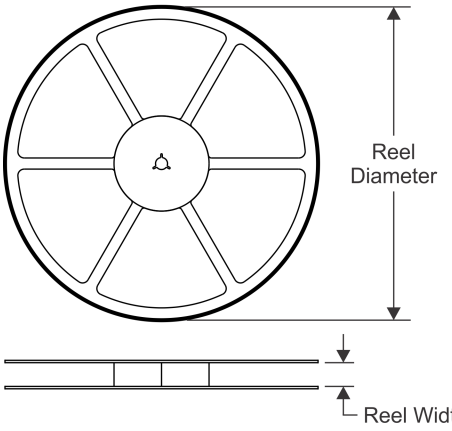

TAPE DIMENSIONS

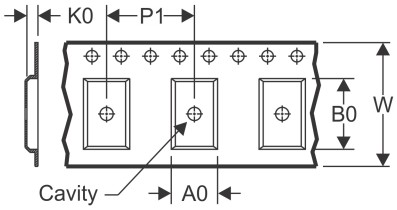

A0	Dimension designed to accommodate the component width
B0	Dimension designed to accommodate the component length
K0	Dimension designed to accommodate the component thickness
W	Overall width of the carrier tape
P1	Pitch between successive cavity centers

QUADRANT ASSIGNMENTS FOR PIN 1 ORIENTATION IN TAPE

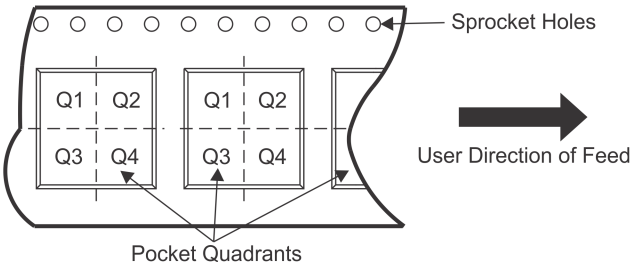

*All dimensions are nominal

Device	Package Type	Package Drawing	Pins	SPQ	Reel Diameter (mm)	Reel Width W1 (mm)	A0 (mm)	B0 (mm)	K0 (mm)	P1 (mm)	W (mm)	Pin1 Quadrant
CSD25301W1015	DSBGA	YZC	6	3000	180.0	8.4	1.09	1.56	0.65	4.0	8.0	Q1

TAPE AND REEL BOX DIMENSIONS

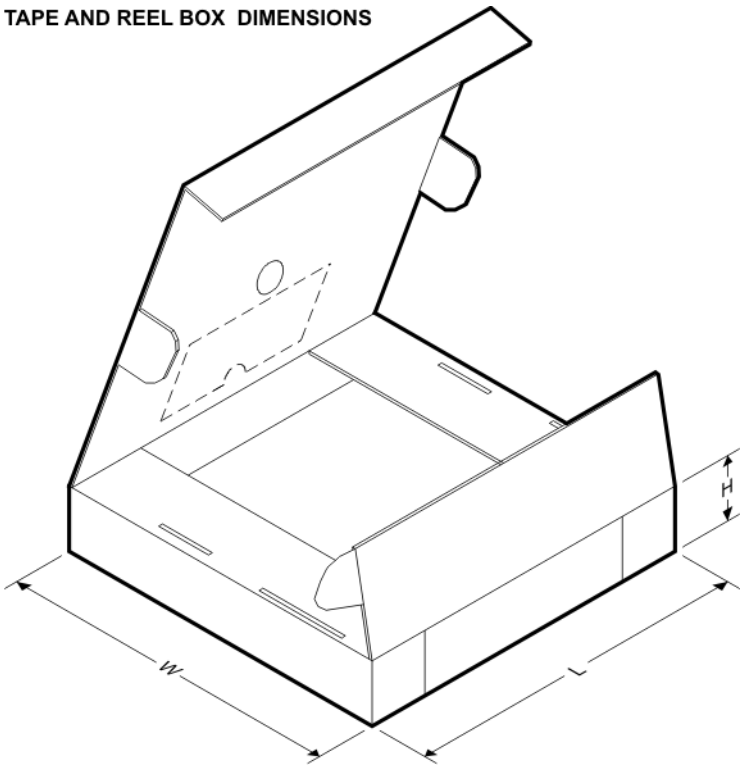

*All dimensions are nominal

Device	Package Type	Package Drawing	Pins	SPQ	Length (mm)	Width (mm)	Height (mm)
CSD25301W1015	DSBGA	YZC	6	3000	182.0	182.0	17.0

IMPORTANT NOTICE

Texas Instruments Incorporated and its subsidiaries (TI) reserve the right to make corrections, enhancements, improvements and other changes to its semiconductor products and services per JESD46, latest issue, and to discontinue any product or service per JESD48, latest issue. Buyers should obtain the latest relevant information before placing orders and should verify that such information is current and complete. All semiconductor products (also referred to herein as “components”) are sold subject to TI’s terms and conditions of sale supplied at the time of order acknowledgment.

TI warrants performance of its components to the specifications applicable at the time of sale, in accordance with the warranty in TI’s terms and conditions of sale of semiconductor products. Testing and other quality control techniques are used to the extent TI deems necessary to support this warranty. Except where mandated by applicable law, testing of all parameters of each component is not necessarily performed.

TI assumes no liability for applications assistance or the design of Buyers’ products. Buyers are responsible for their products and applications using TI components. To minimize the risks associated with Buyers’ products and applications, Buyers should provide adequate design and operating safeguards.

TI does not warrant or represent that any license, either express or implied, is granted under any patent right, copyright, mask work right, or other intellectual property right relating to any combination, machine, or process in which TI components or services are used. Information published by TI regarding third-party products or services does not constitute a license to use such products or services or a warranty or endorsement thereof. Use of such information may require a license from a third party under the patents or other intellectual property of the third party, or a license from TI under the patents or other intellectual property of TI.

Reproduction of significant portions of TI information in TI data books or data sheets is permissible only if reproduction is without alteration and is accompanied by all associated warranties, conditions, limitations, and notices. TI is not responsible or liable for such altered documentation. Information of third parties may be subject to additional restrictions.

Resale of TI components or services with statements different from or beyond the parameters stated by TI for that component or service voids all express and any implied warranties for the associated TI component or service and is an unfair and deceptive business practice. TI is not responsible or liable for any such statements.

Buyer acknowledges and agrees that it is solely responsible for compliance with all legal, regulatory and safety-related requirements concerning its products, and any use of TI components in its applications, notwithstanding any applications-related information or support that may be provided by TI. Buyer represents and agrees that it has all the necessary expertise to create and implement safeguards which anticipate dangerous consequences of failures, monitor failures and their consequences, lessen the likelihood of failures that might cause harm and take appropriate remedial actions. Buyer will fully indemnify TI and its representatives against any damages arising out of the use of any TI components in safety-critical applications.

In some cases, TI components may be promoted specifically to facilitate safety-related applications. With such components, TI’s goal is to help enable customers to design and create their own end-product solutions that meet applicable functional safety standards and requirements. Nonetheless, such components are subject to these terms.

No TI components are authorized for use in FDA Class III (or similar life-critical medical equipment) unless authorized officers of the parties have executed a special agreement specifically governing such use.

Only those TI components which TI has specifically designated as military grade or “enhanced plastic” are designed and intended for use in military/aerospace applications or environments. Buyer acknowledges and agrees that any military or aerospace use of TI components which have ***not*** been so designated is solely at the Buyer's risk, and that Buyer is solely responsible for compliance with all legal and regulatory requirements in connection with such use.

TI has specifically designated certain components as meeting ISO/TS16949 requirements, mainly for automotive use. In any case of use of non-designated products, TI will not be responsible for any failure to meet ISO/TS16949.

Products		**Applications**	
Audio	www.ti.com/audio	Automotive and Transportation	www.ti.com/automotive
Amplifiers	amplifier.ti.com	Communications and Telecom	www.ti.com/communications
Data Converters	dataconverter.ti.com	Computers and Peripherals	www.ti.com/computers
DLP® Products	www.dlp.com	Consumer Electronics	www.ti.com/consumer-apps
DSP	dsp.ti.com	Energy and Lighting	www.ti.com/energy
Clocks and Timers	www.ti.com/clocks	Industrial	www.ti.com/industrial
Interface	interface.ti.com	Medical	www.ti.com/medical
Logic	logic.ti.com	Security	www.ti.com/security
Power Mgmt	power.ti.com	Space, Avionics and Defense	www.ti.com/space-avionics-defense
Microcontrollers	microcontroller.ti.com	Video and Imaging	www.ti.com/video
RFID	www.ti-rfid.com		
OMAP Applications Processors	www.ti.com/omap	**TI E2E Community**	e2e.ti.com
Wireless Connectivity	www.ti.com/wirelessconnectivity		

Mailing Address: Texas Instruments, Post Office Box 655303, Dallas, Texas 75265
Copyright © 2013, Texas Instruments Incorporated